HTH7G14S150H(B)

150W, 1.8 - 1400 MHz LDMOS Amplifier

Product datasheet

Description

The HTH7G14S150H(B) is a unmatched discrete LDMOS Power Amplifier with 150W saturated output power covering frequency range from 1.8 - 1400 MHz.

Features

- Operating Frequency Range: 1.8 - 1400 MHz
- Operating Drain Voltage: 28-50V
- Saturation Output Power: 150W
- Internally Unmatched device
- Excellent thermal stability due to low thermal resistance package
- Enhanced robustness design without device degradation
- Internally integrated enhanced ESD design

Applications

- Industrial, scientific, medical (ISM)
  - Laser generation
  - Plasma generation
  - Particle accelerators
  - MRI, RF ablation and skin treatment
  - Industrial heating, welding and drying systems

Ordering Information

Part Number	Description
HTH7G14S150H(B)	Tray Package
HTH7G14S150H(B)EVB	860 MHz EVB

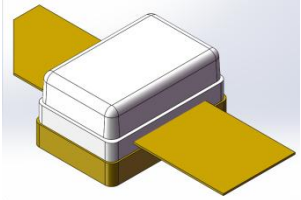

ACC0906S-2L
Earless Flanged balanced
Air Cavity Ceramic Package; 2 Leads
HTH7G14S150H

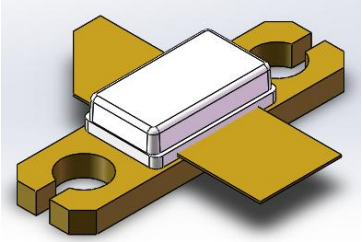

ACC0906B-2L
Flanged balanced
Air Cavity Ceramic Package; 2 Leads
2 Mounting Holes
HTH7G14S150HB

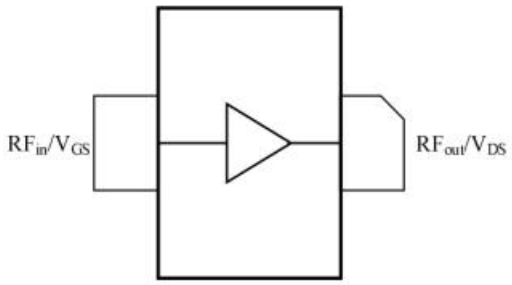

(Top View)

Note: Exposed backside of the package is the source terminal for the transistor

Pin Connections

Typical Performance

RF Characteristics (Pulsed CW)

Freq (MHz)	P1dB (dBm)	P1dB (W)	Gain (dB)	Eff(%)@P3dB
860	52.0	158	21.5	56.0

Test conditions unless otherwise noted: 25 °C, VDD = +50Vdc, IDQ =300mA, PW = 100us, DC= 10% test on WATECH Application Board

Absolute Maximum Ratings

Parameter	Range/Value	Unit
Drain voltage (V_{DSS})	-0.5 to +105	V
Gate voltage (V_{GS})	-5 to +10	V
Storage Temperature (T_{STG})	-55 to +150	°C
Junction Temperature (T_J)	-40 to +225	°C

Electrical Specification

DC Characteristics

Parameter	Conditions	Min	Typ	Max	Unit
Breakdown Voltage $V_{(BR)DSS}$	Vgs=0V, Ids=100uA	105	-	-	V
Gate-Source Threshold Voltage $V_{GS(th)}$	Vds=Vgs, Ids=100uA	1.2	2.0	2.8	V
Drain Leakage Current I_{DSS}	Vgs=0V, Vds=50V	-	-	10	uA
Gate Leakage Current I_{GSS}	Vgs=5V, Vds=0V	-	-	1	uA

Load Mismatch Test

Condition	Test Result
VSWR=20:1 at all Phase Angles, VDD = +50Vdc, IDQ=300mA, Pout = 150W, PW = 200us, DC= 20%, freq@860 MHz	No Device Degradation

Thermal Information

Parameter	Condition	Value (Typ)	Unit
Thermal Resistance Junction to Case (R_{TH})	T_{FLANGE}= 60°C, VDD = +50Vdc, IDQ=300mA, Pout= 52 dBm (150W), PW = 100us, DC= 10%, freq@860 MHz	0.8	°C /W

HTH7G14S150H(B) 860 MHz Reference Design

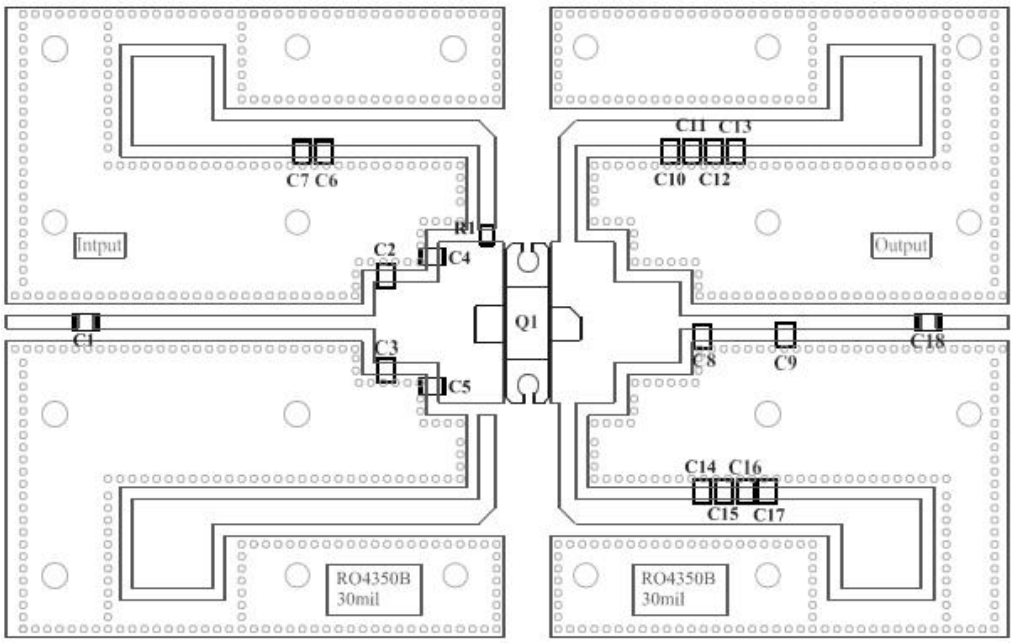

EVB Layout

Bill of Materials (BoM) - HTH7G14S150H(B) 860 MHz Reference Design

Reference	Value	Description	Manufacturer	P/N
Q1	-	150W, 1.8 - 1400 MHz LDMOS PA	Watech	HTH7G14S150H(B)
C1, C6, C10, C14, C18	56pF	MLCC	ATC	ATC100B560JT500XT
C2	6.8pF	MLCC	ATC	ATC100B6R8JT500XT
C3	8.2pF	MLCC	ATC	ATC100B8R2JT500XT
C4, C5, C8	10pF	MLCC	ATC	ATC100B100JT500XT
C9	2.4pF	MLCC	ATC	ATC100B2R4JT500XT
C11, C15	10nF	MLCC	Murata	GR321AD72E103KW01D
C7, C12, C13, C16, C17	10uF	MLCC	Murata	GRM32EC72A106KE05
C19	10uF	MLCC	AVX	22201C106MAT2A
R1,	10Ω	Thick Film Resistor	YAGEO	RC0805FR-0710RL
PCB	Rogers4350B (er = 3.66), 30 mil (0.762 mm), 35 µm (1oz)			

Performance Plots

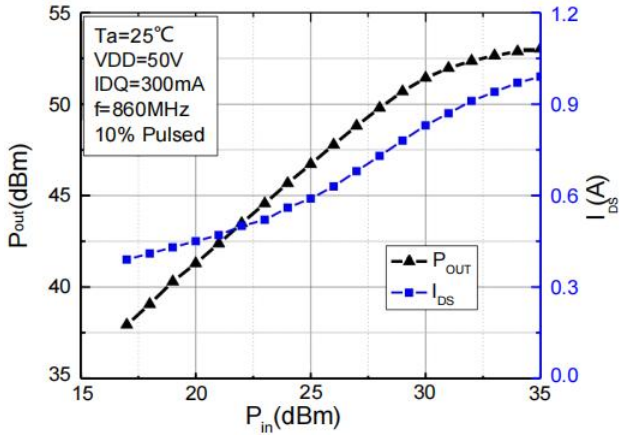

Pulsed CW, Pout vs Pin

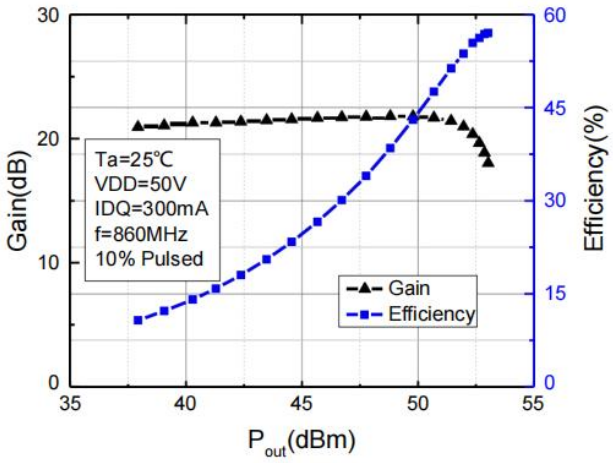

Pulsed CW, Gain and Efficiency vs Pout

Test conditions unless otherwise noted: 25 °C, VDD = +50dc, IDQ= 300mA, PW = 100us, DC= 10% test on WATECH Application Board

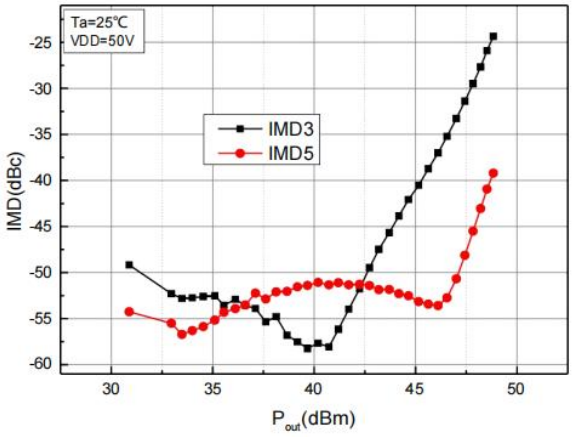

Two Tone IMD vs Pout

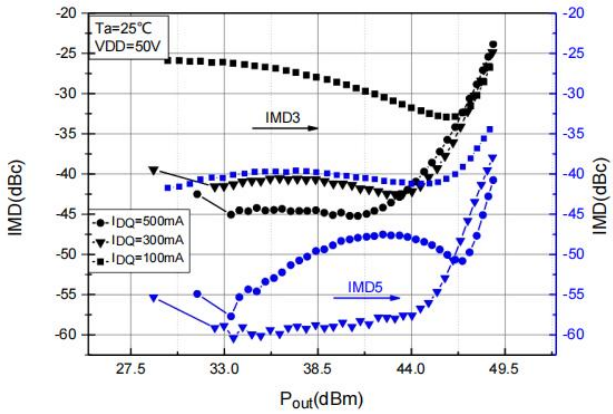

Two Tone IMD vs Pout @Idq's

Test conditions unless otherwise noted: 25 °C, VDD = +50Vdc, IDQ=300mA, Two tone Test, Carrier Spacing @600KHz test on WATECH Application Board

Package Marking and Dimensions

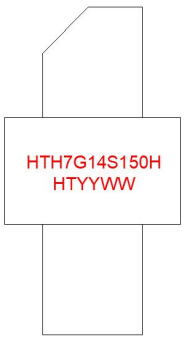

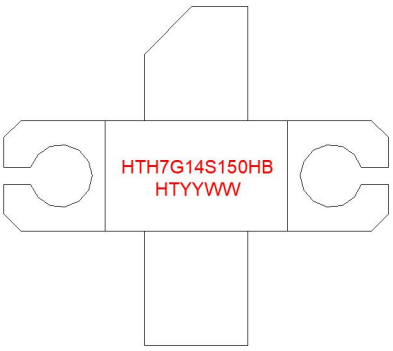

- Line1 (fixed): Device name in W/O
- Line2 (unfixed): HT+Date Code

This Marking SPEC only stipulates the content of Marking. For marking requirements such as font and size, please refer to the latest version of "Watech Product Printing Specification"

Marking

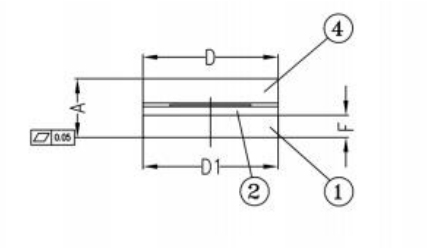

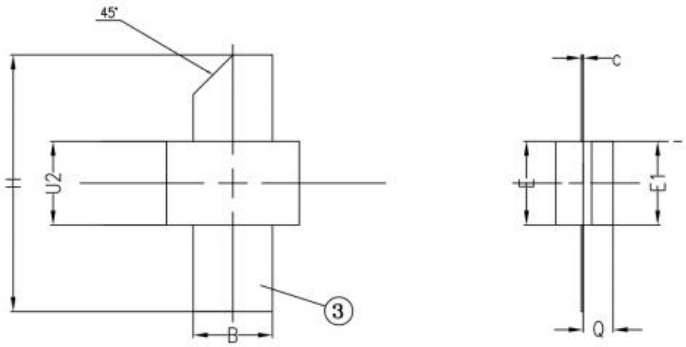

Symbol	Dimensions In Millimeters			Dimensions In Inches		
	Min.	Mon.	Max.	Min.	Mon.	Max.
A	3.84	3.98	4.12	0.151	0.157	0.162
B	5.37	5.50	5.63	5.211	0.217	0.222
C	0.11	0.13	0.15	0.004	0.005	0.006
D	9.07	9.20	9.33	0.357	0.362	0.367
D1	9.07	9.20	9.33	0.357	0.362	0.367
E	5.67	5.80	5.93	0.223	0.228	0.233
E1	5.67	5.80	5.93	0.223	0.228	0.233
F	1.37	1.50	1.63	0.054	0.059	0.064
H	17.30	17.80	18.30	0.681	0.701	0.720
Q	1.95	2.08	2.21	0.077	0.082	0.087
U2	5.67	5.80	5.93	0.223	0.228	0.233

Package Dimensions

ACC0906S-4L Earless Flanged Air Cavity Ceramic Package; 2 Leads

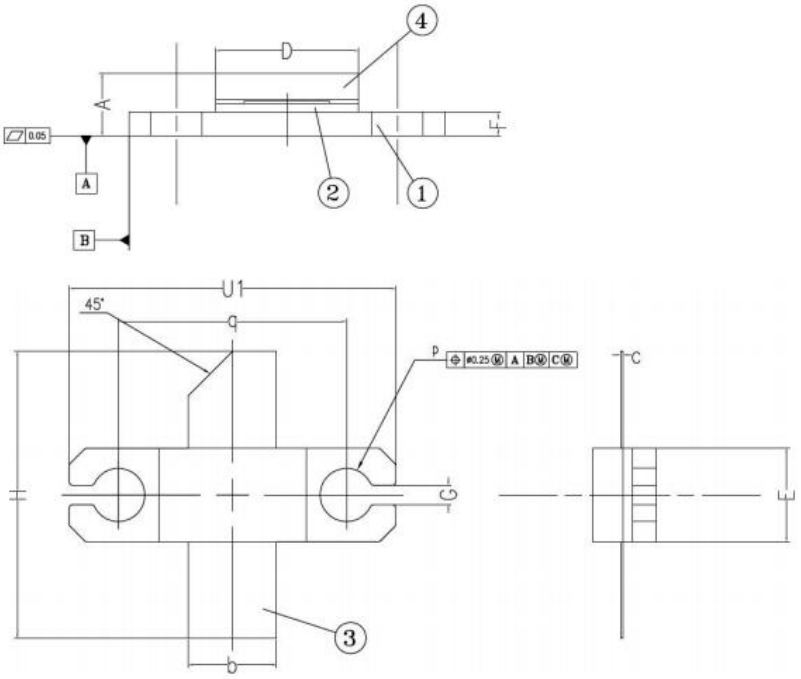

Symbol	Dimesions in Milimeters			Dimesions in Inches		
	Min.	Mon.	Max.	Min.	Mon.	Max.
A	3.84	3.98	4.12	0.151	0.157	0.162
b	5.37	5.50	5.63	5.211	0.217	0.222
c	0.11	0.13	0.15	0.004	0.005	0.006
D	9.07	9.20	9.33	0.357	0.362	0.367
E	5.67	5.80	5.93	0.223	0.228	0.233
F	1.37	1.50	1.63	0.054	0.059	0.064
G	1.07	1.20	1.33	0.042	0.047	0.052
H	17.30	17.80	18.30	0.681	0.701	0.720
p	3.05	3.3	3.55	0.120	0.130	0.140
q	14.07	14.20	14.33	0.554	0.559	0.564
U1	20.17	20.30	20.43	0.794	0.799	0.804

Package Dimensions

ACC0906B-2L Flanged balanced Air Cavity Ceramic Package; 2 Leads; 2 Mounting Holes

Tape and Reel Information

Package Type	Qty/Tray(pcs)	Qty/Box(pcs)
ACC0906	30	300

Packaging Descriptions

Handling Precautions

Parameter	Grade
Moisture Sensitivity Level MSL	3

Parameter	Rating	Standard
ESD – Human Body Model (HBM)	Class 1B	JESD22-A114
ESD – Human Body Model (MM)	Class A	EIA/JESD22-A115
ESD – Charged Device Model (CDM)	Class III	JESD22-C101

RoHS Compliance

This product is compliant with the 2011/65/EU RoHS directive (Restrictions on the Use of Certain Hazardous Substances in Electrical and Electronic Equipment), as amended by Directive 2015/863/EU.

Datasheet Status

Document status	Product status	Definition
Objective Datasheet	Design simulation	Product objective specification
Preliminary Datasheet	Customer sample	Engineering samples and first test results
Product Datasheet	Mass production	Final product specification

Abbreviations

Acronym	Definition
LDMOS	Laterally-Diffused Metal-Oxide Semiconductor
CW	Continuous Waveform

Revision history

Document ID	Datasheet Status	Release Date	Revision Version
Rev 2.2	Product	March 2023	New format based on English version datasheet
Rev 2.3	Product	Sept. 2023	Update TBD information
Rev 2.4	Product	March 2024	Version released after re review

Contact Information

For the latest specifications, additional product information, worldwide sales and distribution locations and information about WATECH:

- Web: www.watechelectronics.com
- Email: MKT@huatai-elec.com

For technical questions and application information:

- Email: MKT@huatai-elec.com

Important Notice

Information in this document is believed to be accurate and reliable. However, WATECH does not give any representations or warranties, expressed or implied, as to the accuracy or completeness of such information and shall have no liability for the consequences of use of such information.

“Typical” parameters are the average values expected by WATECH in large quantities and are provided for information purposes only. All information and specifications contained herein are subject to change without notice and customers should obtain and verify the latest relevant information before placing orders for WATECH products.

The information contained herein or any use of such information does not grant, explicitly or implicitly, to any party any patent rights, licenses, or any other intellectual property rights, whether with regard to such information itself or anything described by such information.

Applications that are described herein for any of these products are for illustrative purposes only. WATECH makes no representation or warranty that such applications will be suitable for the specified use without further testing or modification. Customers are responsible for the design and operation of their applications and products using WATECH products, and WATECH accepts no liability for any assistance with applications or customer product design. It is customer's sole responsibility to determine whether the WATECH product is suitable and fit for the customer’s applications and products planned, as well as for the planned application and use of customer’s third-party customer(s). Customers should provide appropriate design and operating safeguards to minimize the risks associated with their applications and products.

WATECH products are not designed, authorized or warranted to be suitable for use in life support, life-critical or safety- critical systems or equipment, nor in applications where failure or malfunction of a WATECH product can reasonably be expected to result in personal injury, death or severe property or environmental damage.This document as well as the item(s) described herein may be subject to export control regulations. Export might require a prior authorization from competent authorities.